PREPARED BY: DATE	SHARP	SPECNO. LC 96618
		FILE No.
APPROVED BY: DATE	NARA LIQUID CRYSTAL DISPLAY GROUP SHARP CORPORATION	ISSUE JUN.28.1996
		PAGE 24 Pages
		APPLICABLE DIVISION ■ DUTY PANEL DEVELOPMENT CENTER ❑ ITFT DEVELOPMENT CENTER ❑ LCD PRODUCTS DEVELOPMENT CENTER ❑ IEL PRODUCTION DEPT.
	SPECIFICATION	

DEVICE SPECIFICATION for

Passive Matrix COLOR LCD Unit

(640x480 dots)

Model No.

LM64C350

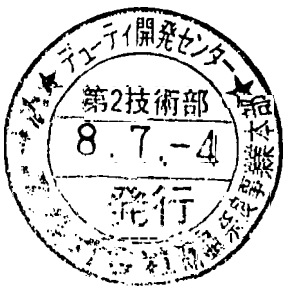

❑ CUSTOMER'S APPROVAL

DATE

BY

PRESENTED

BY

Y. Inoue

DEPARTMENT GENERAL MANAGER

ENGINEERING DEPARTMENT II

DUTY PANEL DEVELOPMENT CENTER

NARA LIQUID CRYSTAL DISPLAY GROUP

SHARP CORPORATION

1. Application

This data sheet is to introduce the spec fication of LM64C350 , Passive Matrix type Color LCD Module.

2. Construction and Outline

Construction: 640x480 dots color display Module consisting of an LCD panel, PWB(printed wiring board) with electric components mounted onto, TCP(tape carrier package) to connect the LCD panel and PWB electrically, and plastic chassis with CCFT back light and bezet to fix them mechanically.

Signal ground(VSS) is connected with the metal beze

DC/DC converter is built in.

LCD Panel (with Anti-glare treatment,
Pencil hardness 3H)

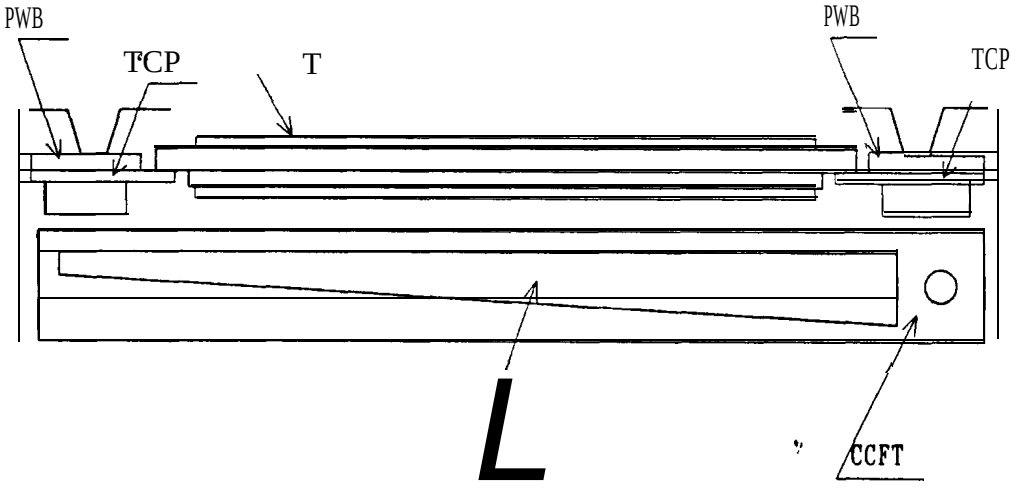

Outline : See Fig. 10

Connection : See Fig. 10 and Table 6

3. Mechanical Specifications

Table 1

Parameter	Specifications	Unit
Outline dimensions	242.5 (W) X179.4 (H) X8.5 MAX(D)	mm
Effective viewing Area	214.2(W)×161.4(H)	mm
Display format	640(W) X480(H) full dots	—
Dot size	0.085×RGB(W) X0.305(H)	mm
Dot spacing	0.025	mm
*1 Base color	Normally black *2	—
Weight ,	Approx. 390	g

*1 Due to the characteristics of the LC material, the colors vary with environmental temperature.

*2 Negative-type display
Display data "H": ON → transmission
Display data "L": OFF → light isolation

4. Absolute Maximum Ratings

4-1 Electrical absolute maximum ratings

Table 2

Parameter	Symbol	MIN.	MAX.	Unit	Remark
Supply voltage (Logic)	V_{DD}-V_{SS}	0	6.0	v	Ta=25 "C
Input voltage	V_{IN}	-0.3	V_{DD}+0.3	V	Ta=25 "C

4-2 Environments Conditions

Table 3

I tern	Tstg		Topr		Remark
	MIN.	MAX.	MIN.	MAx .	
Ambient temperatuer	-25 “C	+60 “C	o ℃	+40 ℃	Note 4)
Humidity	Note 1)		Note I)		No condensation
Vibration	Note 2)		Note 2)		3 directions (X/Y/Z)
Shock	Note 3)		Note 3)		6 directions (±X±Y±Z)

Note 1) Ta ≦ 40℃ . . ...95 % RH Max

Ta > 40 “C..... Absolute humidity shall be less than Ta=40 “C/95 % RH.

Note 2)

Table 4

Frequency	10 Hz～57 Hz	57 Hz～500 H,
Vibration level	–	9.8 m/s²
Vibration width	0.075 mm	
Interval	10 Hz～500 Hz～10 Hz/11.0 min	

2 hours for each direction of X/Y/Z (6 hours as total)

Note 3 Accerelation : 490 m/s²

Pulse width 11 ms

3 times for each direction of ±X/±Y/±Z

Note 4 Care should be taken so that the LCD Unit may not be subjected to the temperature out of this specification,

5. Electrical Specifications

5-1 Electrical characteristics

Table 5 Ta=25 ℃, V_{DD}=5 V±10 %

Parameter	Symbol	Conditions	Min.	Typ.	Max.	Unit
Supply voltage (Logic)	V_{DD}-V_{SS}	Note 1)	3.0	3.3	5.5	v
Contrast adjust voltage	Vcon -Vss	Ta=O “C	0.8	–	–	v
		Ta=25 ℃	1.35	1.95	2.55	v
		Ta=40 “C	–		2.80	
Input signal voltage	V_{IN}	“H” level	0.8V_{DD}	V_{DD}	V_{DD}+0.3	V
		“L” level	-0.3	V_{SS}	0.2V_{DD}	v
Input leakage current	I_{IL}	“H” level	–	–	1.0	μA
		“L” level	-1.0	–	–	μA
Supply current (Logic)	I_{DD}	Note 2)	–	160	240	mA
Rush current (Logic)	Irush	Ta=25 ℃, Power ON	3 A(pk)×25 ms+1 A(pk)×10 μs max			
Power consumption	Pd	Note 2)	–	800	1 320	mW

Note 1) Under the following conditions. ;

①Immediately after the rise of DISP signal. : 3 Ax25 ms

②Under the situation that DISP signs, is on and kept steady. : 1 AxlO μs

Note 2) Under the following conditions.;

Vcon-Vss : contrast max.(1.95 V TYP)

V_{DD}-Vss=5 V, Frame frequency=73 Hz, Display pattern = black/white stripe pattern

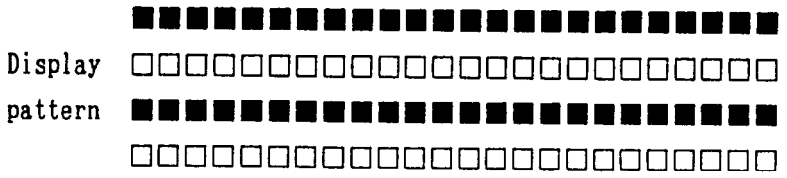

This value is direct current.

5-3 Interface signals

OLCD

Table 7

Pin No	Symbol	Description	Level
1	DL4	Display data signal (Lower)	H(ON), L(OFF)
2	V_{SS}	Ground potential	—
3	DL5	Display data signal (Lower)	H(ON), L(OFF)
4	YD	Scan start-up signal	"H"
5	DL6	Display data signal (Lower)	H(ON), L(OFF)
6	LP	Input data latch signal	"H"→"L"
7	DL7	Display data signal (Lower)	H(ON), L(OFF)
8	V_{SS}	Ground potential	
9	V_{SS}	Ground potential	
10	XCK	Data input clock signal	"H" "L"
11	DLO	Display data signal (Lower)	H(ON), L(OFF)
12	V_{CON}	Contrast adjust voltage	—
13	DLI	Display data signal (Lower)	H(ON), L(OFF)
14	V_{DD}	Power supply for logic and LCD (+5V)	—
15	V_{SS}	Ground potential	—
16	V_{DD}	Power supply for logic and LCD (+5V)	—
17	DL2	Display data signal (Lower)	H(ON), L(OFF)
18	DISP	Display control signal	H(ON), L(OFF)
19	DL3	Display data signal (Lower)	H(ON), L(OFF)
20	NC		—
21	V_{SS}	Ground potential	
22	DU3	Display data signal (Upper)	H(ON), L(OFF)
23	DU4	Display data signal (Upper)	H(ON), L(OFF)
24	DU2	Display data signal (Upper)	H(ON), L(OFF)
25	DU5	Display data signal (Upper)	H(ON), L(OFF)
26	DU1	Display data signal (Upper)	H(ON), L(OFF)
27	V_{SS}	Ground potential	—
28	DUO	Display data signal (Upper)	H(ON), L(OFF)
29	DU6	Display data signal (Upper)	H(ON), L(OFF)
30	V_{SS}	Ground potential	
31	DU7	Display data signal (Upper)	H(ON), L(OFF)

OCCFT

Pin No	Symbol	Description	Level
1	HV	High voltage lineal (from Inverter)	—
2	NC		—
3	GND	Ground line (from Inverter)	—

NOTE) Pin No. and its location are shown in Fig.10.

OLCD

Used connector: DF9B-31P-1V (HIROSE)

Mating connector: DF9B-31S-1V (HIROSE)

OCCFT

Used connector: BHR-03VS-1 (JST)

Mating connector: SM03(4.O)B-BHS or SM02(8.O)B-BHS (JST)

Except above connector shall be out of guaranty

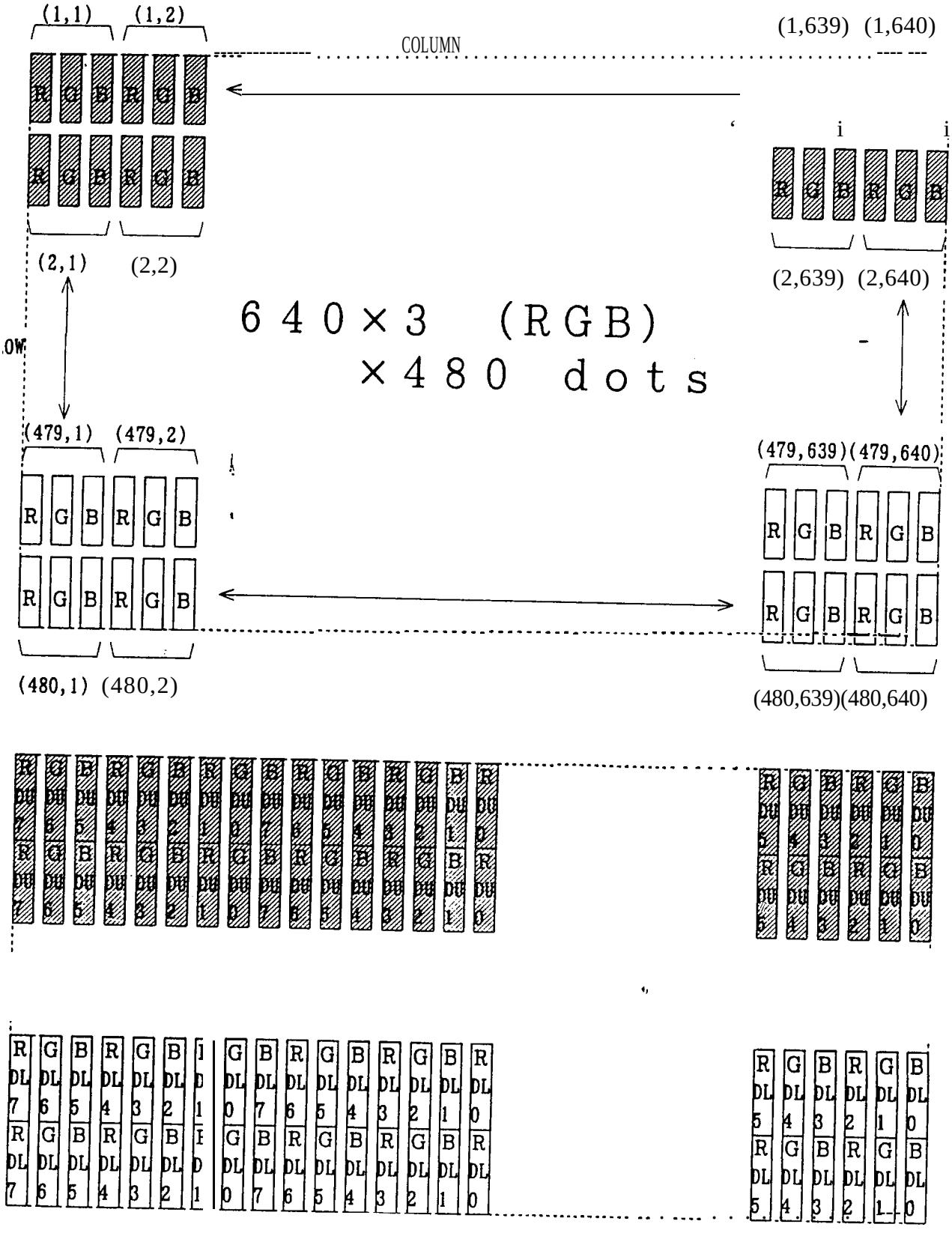

Fig.1 Dot chart of display area

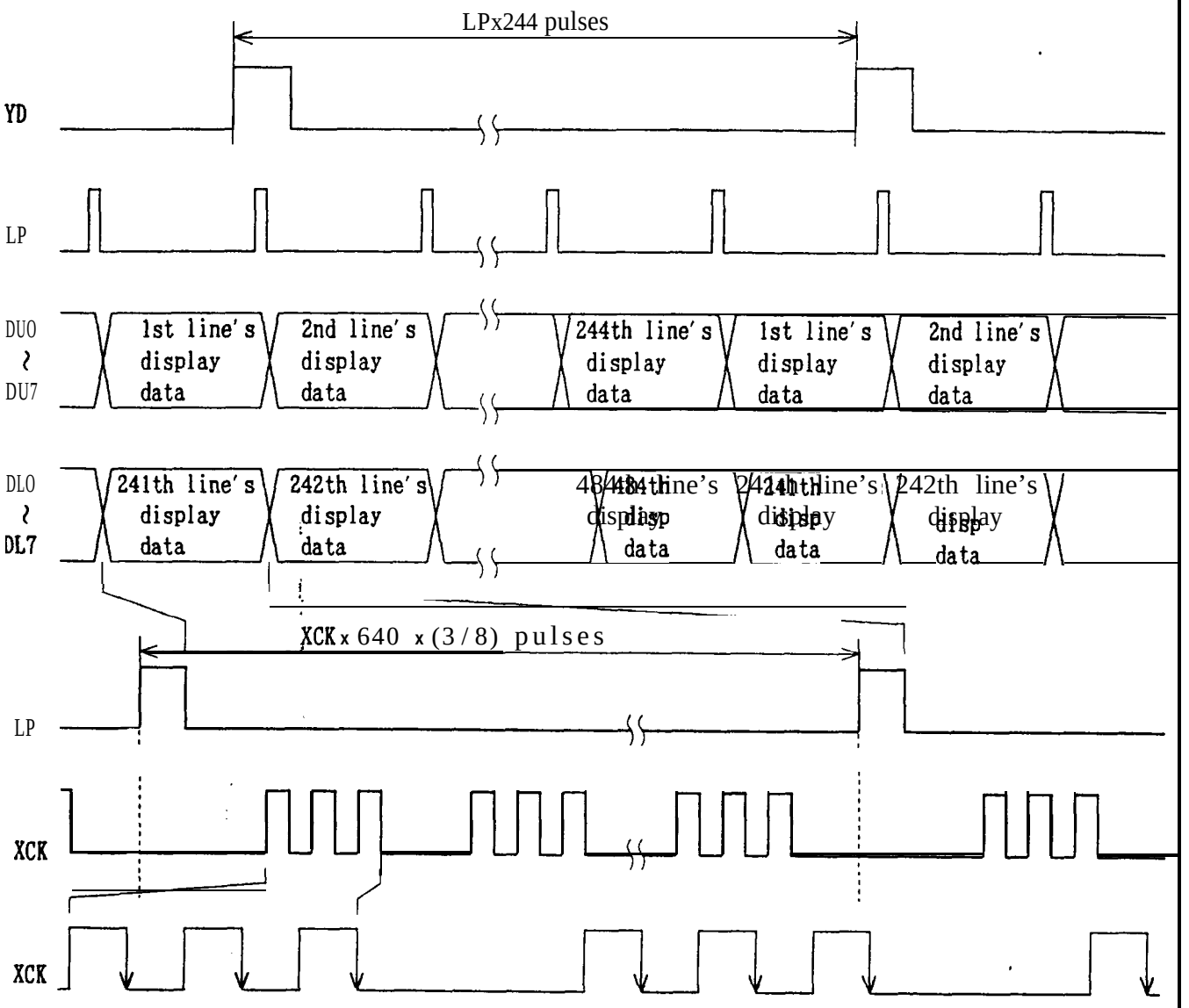

DU7	R(1,1)	B(1,3)	G(1,6)				R(1,9)	B(1,11)	G(1,14)			
DU6	G(1,1)	R(1,4)	B(1,6)				G(1,9)	R(1,12)	B(1,14)			
DU5	B(1,1)	G(1,4)	R(1,7)				B(1,9)	G(1,12)	R(1,15)			
DU4	R(1,2)	B(1,4)	G(1,7)				R(1,1O)	B(1,12)	G(1,15)			
DU3	G(1,2)	R(1,5)	B(1,7)				G(1,1O)	R(1,13)	B(1,15)			
DU2	B(1,2)	G(1,5)	R(1,8)				B(1,10)	G(1,13)	R(1,16)			
DU1	R(1,3)	B(1,5)	G(1,8)				R(1,11)	B(1,13)	G(1,16)			
DU0	G(1,3)	R(1,6)	B(1,8)				G(1,11)	R(1,14)	B(1,16)			

DL7	R(241,1)	B(241,3)	G(241,6)				R(241,9)	B(241,11	G(241,14			
DL6	G(241,1)	R(241,4)	B(241,6)				G(241,9)	R(241,12	B(241,14			
DL5	B(241,1)	G(241,4)	R(241,7)				B(241,9)	G(241,12	R(241,15			
DL4	R(241,2)	B(241,4)	G(241,7)				R(241,10)	B(241,12)	G(241,15)			
DL3	G(241,2)	R(241,5)	B(241,7)				G(241,10)	R(241,13)	B(241,15)			
DL2	B(241,2)	G(241,5)	R(241,8)				B(24I,1O;	G(241,13	R(241,16)			
DL1	R(241,3)	B(241,5)	G(241,8)				R(241,11)	B(241,13	G(241,16:			
DL0	G(241,3),	R(241,6)	B(241,8)				G(241,11'	R(241,14	B(241,16;			

Fig.2 Data input timing chart

Table 8 Interface timing ratings

Item	Symbo 1	Rating MIN.	TYP.	MAX.	Unit
Frame cycle *1	tFRM	8.33		16.94	ms
YD signal "H" level set up time	tHYs	100			ns
"H" level hold time	tHYH	100			ns
"L" level set up time	tLYS	100			ns
"L" level hold time	tLYH	40			ns
LP signal "H" level pulse width	tWLPH	200			ns
XCK signal clock cycle	tCK	82			ns
"H" level clock width	tWCKH	30			ns
"L" level clock width	tWCKL	30			ns
Data set up time	tDS	30			ns
hold time	tDH	30			ns
LP ↑ allowance time from XCK ↓	tLS	200			ns
XCK ↑ allowance time from LP ↓	tLH	200			ns
Input signal rise/fall time	tr,tf			13	ns

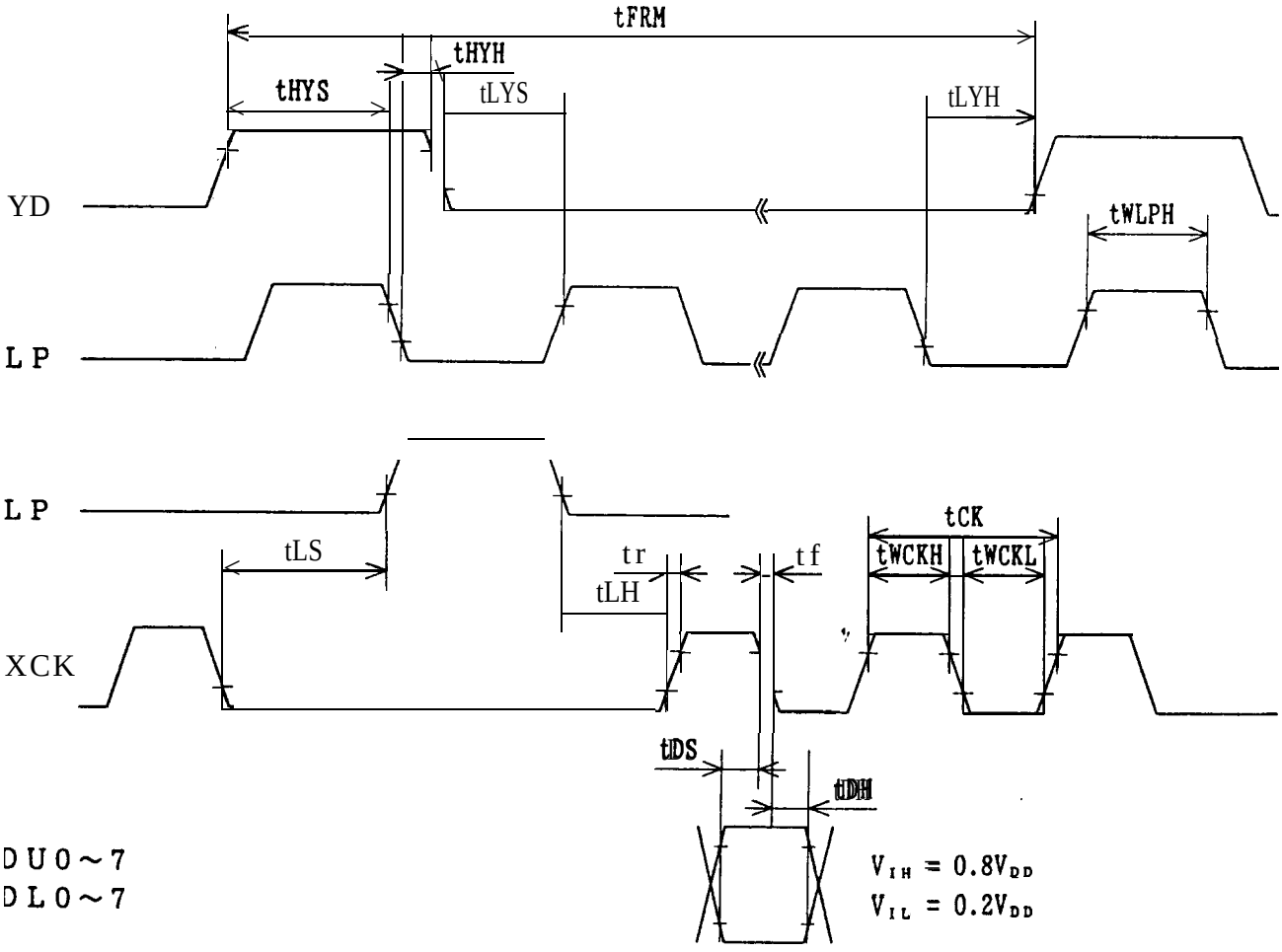

Fig.3 Interface timing chart

*1 LCD unit functions at the minimum frame cycle of 8.33 ms(Maximum frame frequency of 120 Hz).
Owing to the characteristics of LCD unit, "shadowing" will become more eminent as frame frequency goes up, whle flicker wi 11 be reduced.

According to our experiments, f rame cycle of 12.8 ms Min. or frame frequency of 78 Hz Max. will demonstrate optimum display quality in terms of flicker and "shadowing". But since judgement of display quality is subjective and display quality such as "shadowing" is patturn dependent,it is recommended that decision of frame frequency, to which power consumption of the LCD unit is propotional,be made based on your own through testing on the LCD unit with every possible patternsdisplayedonit.

※ The interval of one LP fall and the next must be always the same, and LPs must be input continuously.
The interval must be 70μs Max.

6. Unit Driving Method

6.1 Circuit configuration

Fig.10 shows the block diagram of the Unit's circuitry,

6.2 Display Face Configuration

The display consists of 640x3 (R, G, B)x480 dots as shown in Fig.1.
The interface is single panel with double drive to be driven at 1/244 duty ratio.

6.3 Input Data and Control Signal

The LCD driver is 160 bits LSI, consisting of shift registers, latch circuits and LCD driver circuits. Input data for each row (640x3 R,G,B) will be sequentially transferred in the form of 8 bit parallel data through shift registers from top left of the display together with clock signal (XCK).

When input of one row (640 x3,R,G,B dots) is completed, the data will be latched in the form of parallel data corresponding to the signal electrodes by the falling edge of latch signal (LP). Then, the corresponding drive signals will be transmitted to the 640 x3 lines of column electrodes of the LCD panel by the LCD drive circuits.

At this time, scan start-up signal (YD) has been transferred from the scan signal driver to the 1st row of scan electrodes, and the contents of the data signals are displayed on the 1st row of the display face according to the combinations of voltages applied to the scan and signal electrodes of the LCD. While the data of 1st row are being displayed, the data of 2nd row are entered. When data for 640x3 dots have been transferred, they will be latched by the falling edge of LP, switching the display to the 2nd row.

Such data input will be repeated up to the 244th row of each display segment, from upper row to lower rows, to complete one frame of display by time sharing method.

Simultaneously the same scanning sequence occur at the lower panel.
Then data input proceeds to the next display frame.

YD generates scan signal to drive horizontal electrodes.

Since DC voltage, if applied to LCD panel, causes chemical reaction in LC materials, causing deterioration of the materials, drive wave-form shall be inverted at every display frame to prevent the generation of such DC voltage. Control Signal M plays such a role.

Because of the characteristics of the CMOS driver LSI, the power consumption of the display unit goes up with the clock frequency of XCK.
To minimize data transfer speed of XCK clock the LSI has the system of transferring 8 bit parallel data through the 8 lines of shift registers.
Thanks to this system the power consumption of the display unit is minimized.

In this circuit configuration, 8 bit display data shall input to data input pins of DU0~7 and DL0~7.

Furthermore, the display unit has bus line system for data input to minimize the power consumption with data input terminals of each driver LSI being activated only when relevant data input is fed.

Data input for column electrodes and chip select of driver LSI are made as follows:

The driver LSI at the left end of the display face is first selected, and the adjacent driver LSI right next side is selected when data of 160 dot (20XCK) is fed. This process is sequentially continued until data is fed to the driver LSI at the right end of the display face. This process is followed Simultaneously both at the top and bottom column drivers LSI's.

Thus data input will be made through 8 bit bus line sequentially from the left end of the display face.

Since this display unit contains no refresh RAM, it requires the above data and timing pulse inputs even for static display.

The timing chart of input signals are shown in Fig. 3 and Table 8.

7. Optical Characteristics

Ta = 25 °C, V_{DD} = 5.0 V, Vcon-V_{SS} = Vmax

Table 9

Following spec are based upon the electrical measuring conditions, on which the contrast of perpendicular direction ($\theta x = \theta y = 0°$) will be MAX.

Parameter		Symbol	Condition		MIN.	TYP.	MAX.	Unit	Remark
Viewing angle range		θx	Co > 5.0	ey = o "	-30	-	30	dgr.	Note1)
		θy		$\theta x = 0$ o	-15	·	25	dgr.	
Contrast ratio		c o	$\theta x = \theta y = 0$ o		15	30	-		Note2)
Response time	Rise	τr	ex = ey = o °		-	220	300	ms	Note3)
	Decay	τd	$\theta x = \theta y = 0$ °		·	80	100	ms	
Unit chromaticity	White	x	$\theta x = \theta y = 0$ O		-	0.275	-	–	
		Y	$\theta x = \theta y = 0$ °		·	0.320	-	–	

Note 1) The viewing angle range is defined as shown Fig.4.

Note 2) Contrast ratio is defined as follows:

$$Co = \frac{\text{Luminance(brightness) all pixels "White" at Vmax}}{\text{Luminance(brightness) all pixels "dark " at Vmax}}$$

Vmax is defined in Fig.6.

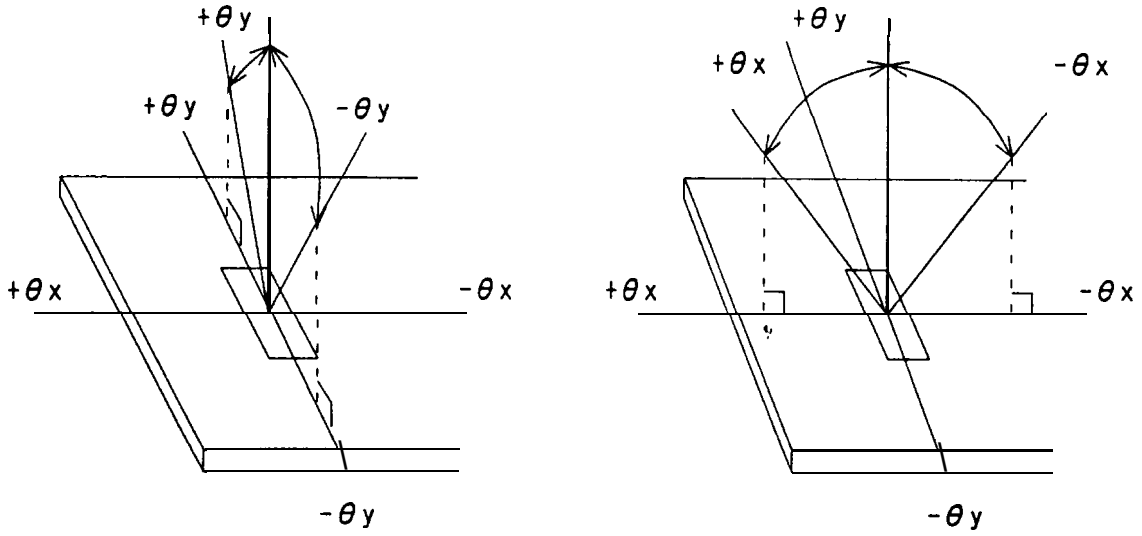

Fig.4 Definition of Viewing Angle

Note 3) The response characteristics of photo-detector output are measured as shown in Fig.8, assuming that input signals are applied so as to select and deselect the dots to be measured, in the optical characteristics test method shown in Fig.7.

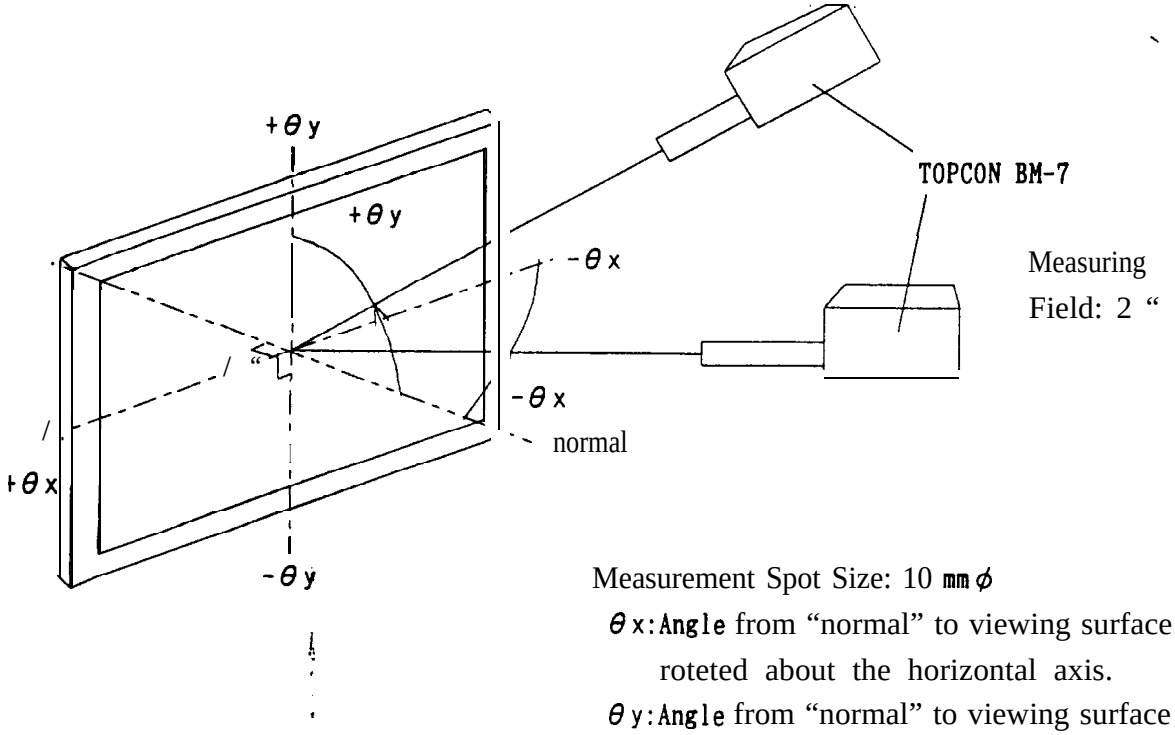

Measurement Spot Size: 10 mmϕ

θx: Angle from “normal” to viewing surface roteted about the horizontal axis.

θy: Angle from “normal” to viewing surface roteted about the vertical axis.

Fig. 5 Optical Characteristics Test Method I

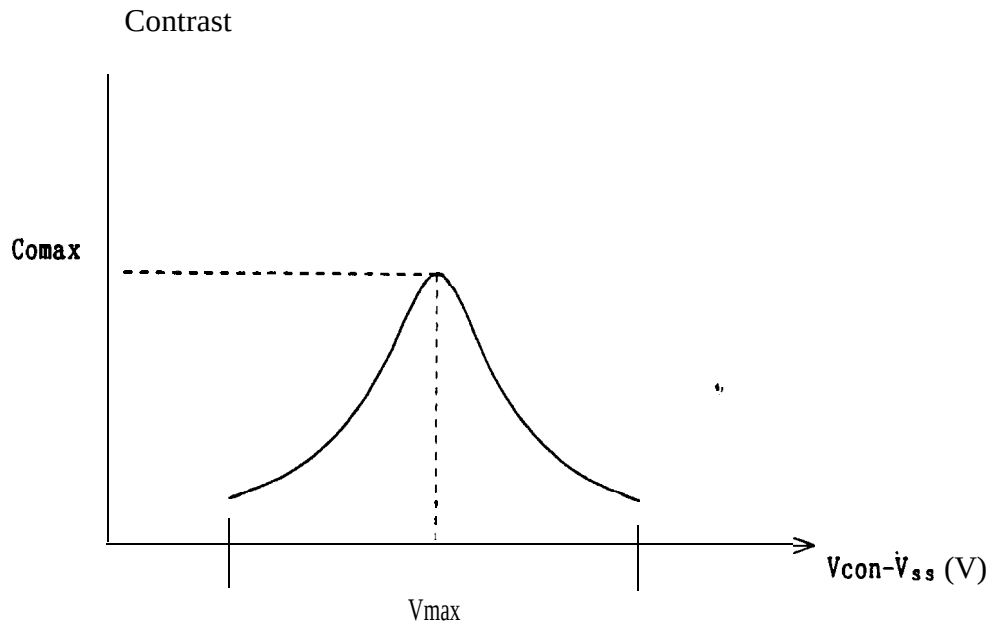

Fig. 6 Definition of V_{Max}

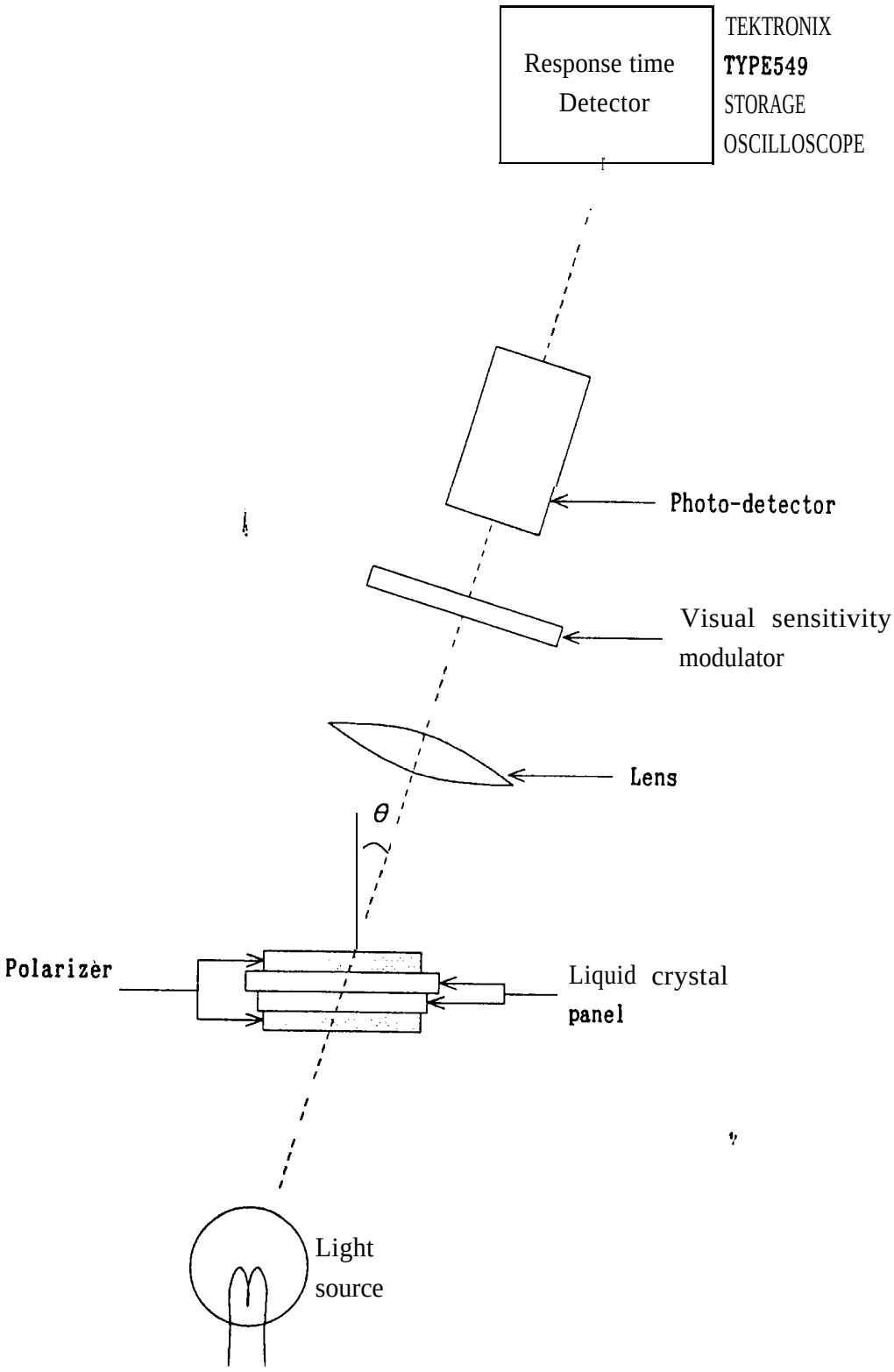

Fig.7 Optical Characteristics Test Method II

[Drive waveform 1

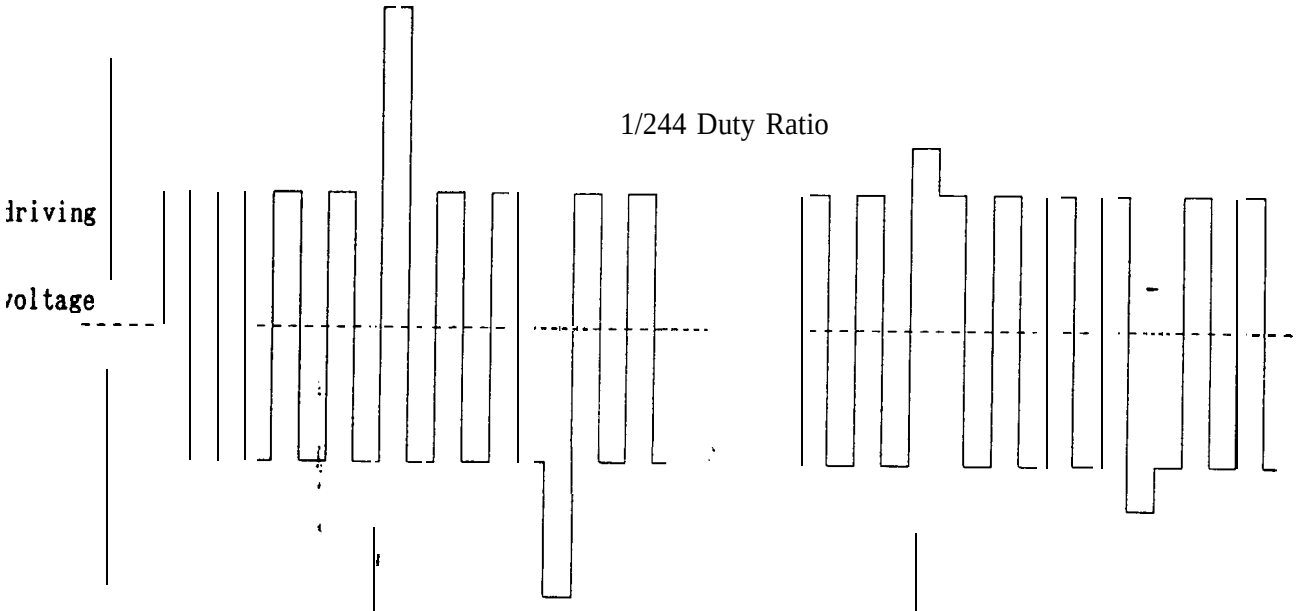

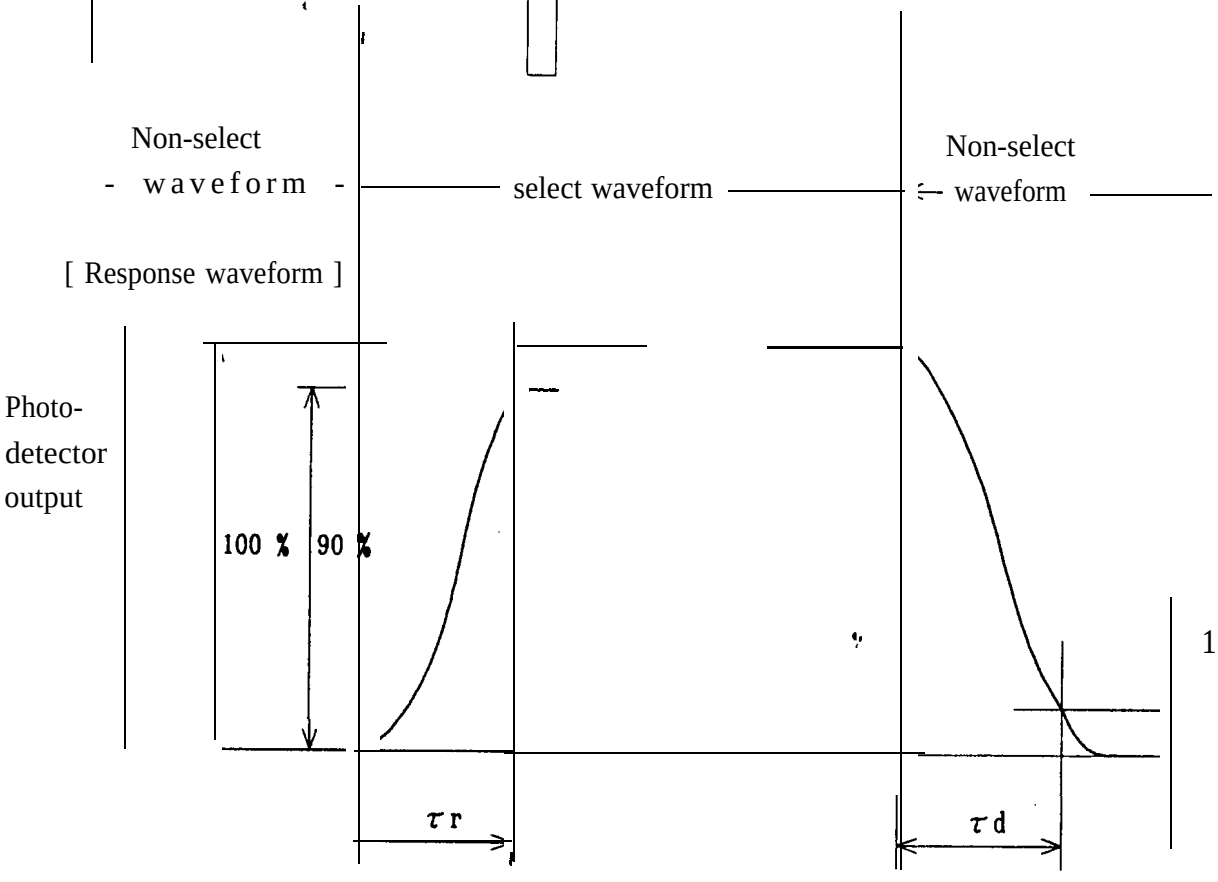

τr: Rise time
rd: Decay time

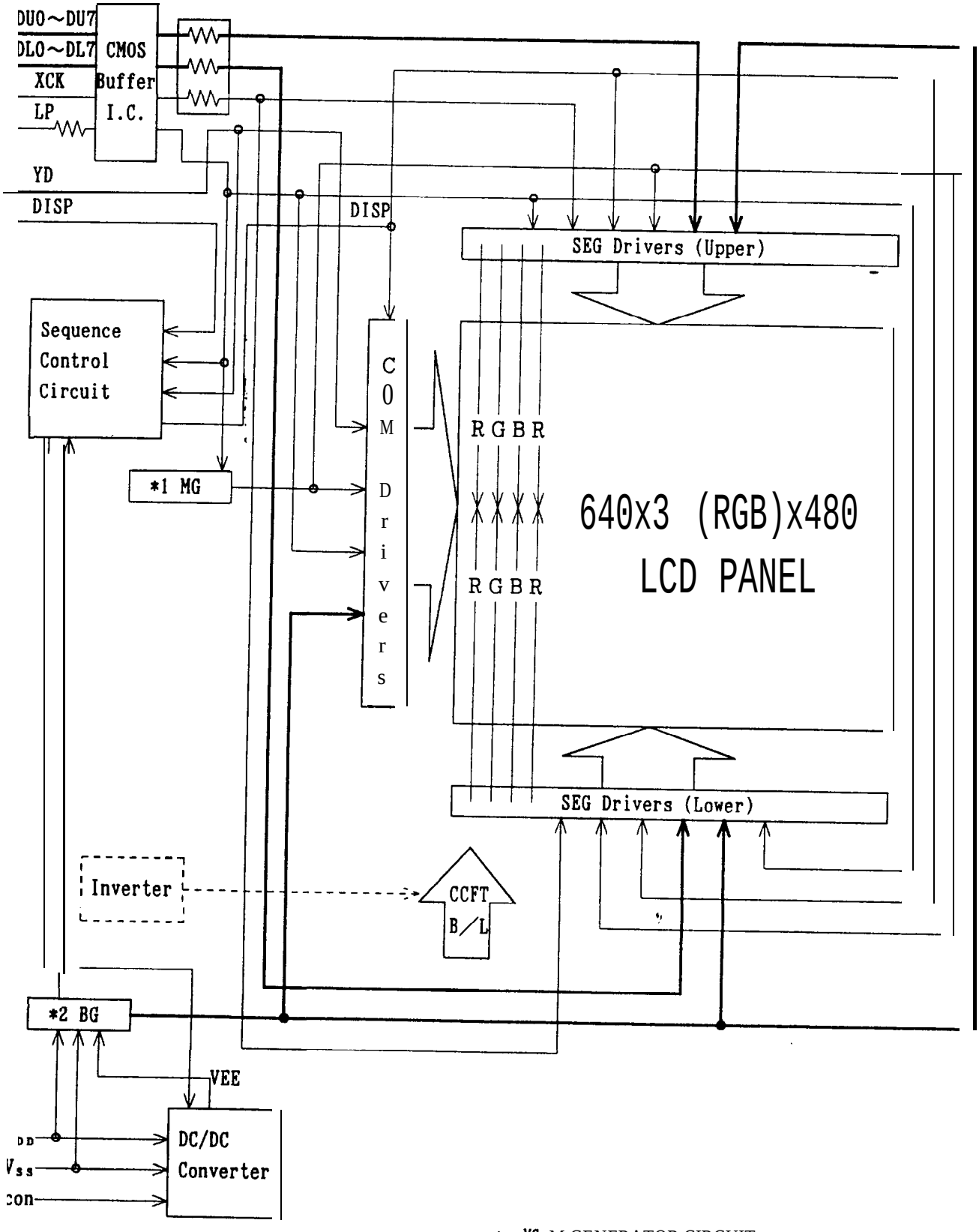

Fig.9 Circuit block diagram

* MG: M GENERATOR CIRCUIT

*2 BG: BIAS GENERATOR & PROTECTION CIRCUIT

8. Characteristics of Backlight

The ratings are given on condition that the following conditions are satisfied.

1) Rating (Note)

Parameter	Min	Typ	Max	Unit
Brightness	50	70	—	cd/m²

2) Measurement circuit: CXA-M1OL (TDK) (at IL=5.4 mArms)

3) Measurement equipment: BM-7 (TOPCON Corporation)

4) Measurement conditions

4-1 Measurement circuit voltage: DC=9.6 V, at primary side

4-2 LCD: All digits WHITE, V_{DD}= 5 V, Vcon-Vss=Vmax, DUO-7="H" (WHITE), DL0～7="H" (WHITE)

4-3 Ambient temperature: 25 "C

Measurement shall be executed 30 minutes after turning on.

5) Used lamp: HMBS26B91W223CNLS/AXZ HARISON ELECTRIC CO.', LTD. : 1 pc

5-1 Rating

Parameter	Symbol	Min.	Typ.	Max.	Unit	Remark
Lamp voltage	V_L	-	550	-	Vrms	—
Lamp current	I_L	3.8	5.4	6.0	mArms	(*1)
Lamp power consumption	P_L	-	2.8	-	W	(*2)
Lamp frequency	F_L	20	-	50	kHz	—
Kick-off voltage	V_S	-	-	1 050	Vrms	Ta=25°C
				1 200	Vrms	Ta=0°C (*3)
Lamp life time	L_L	15 000	25 00C	-	h	—

Within no conductor closed. (CCFT only)

(*1) It is recommended that IL be not more than 5.4 mArms so that heat radiation of CCFT backlight may least affect the display quality.

(*2) Power consumption excluded inverter loss,

(*3) The circuit voltage of the inverter should be designed to have some margin(reference value: 1 450 VrmsMIN), because VS may be increased due to the leak current in case of the LCD unit.

5-2 Operating life

The operating life time is 15 000 hours or more at 5.4 mA.

(Operating life with CXA-M10L-L or equivalent,)

The inverter should meet the following conditions to keep the specified life time of used lamp;

-Sine, symmetric waveform without spike in positive and negative.

-Output frequency range: 20 KHz～50 KHz

Make sure the operating conditions by executing the burn-in enough time

The operating life time is defined as having ended when any of the following conditions occur; 25±1 'C

-When the voltage required for initial discharge has reached 110 % of the initial value

-When the illuminence or quantity of light has decreased to 50 % of the initial value

(NOTE) Rating are defined as the average brightness inside the viewing area specified in Fig.11.

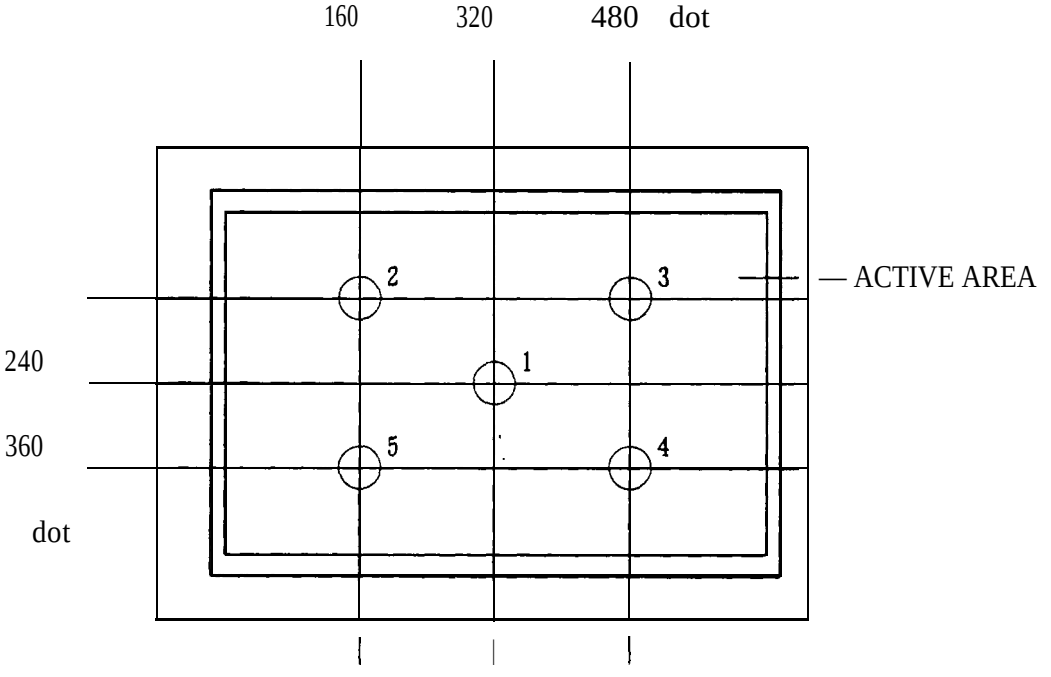

Fig.11 Measureing points (1~5)

9. Precautions

1) Industrial (Mechanical)design of the product in which this LCD unit will be incorporated must be made that the viewing angle characteristics of the LCD maybe optimized.

This unit's viewing angle is illustrated in Fig.12.

θy MIN < viewing angle < θy MAX

(For the specific values of θymin.θymax. refer to the table 9.)

Please consider the optimum viewing conditions according to the purpose when installing the unit.

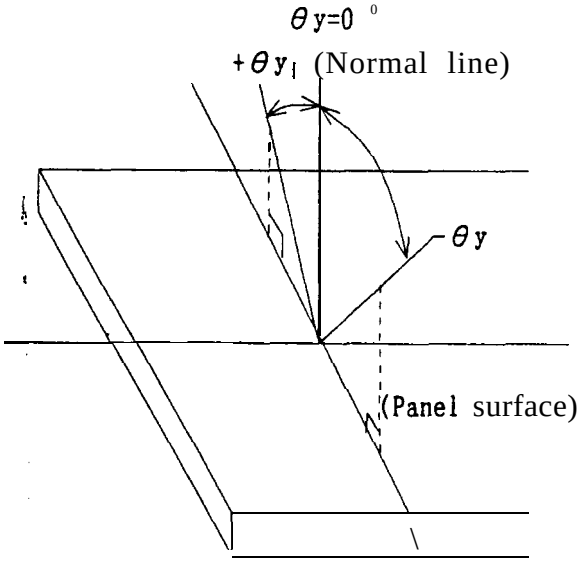

Fig.12 Dot matrix LCD viewing angle

2 This unit is installed using mounting holes metal PBC or bezel.

When installing the unit, pay attention and handle carefully not to allow any undue stress such as twist or bend.

A transparent acrylic resin board or other type of protective panel should be attached to the front of the unit to protect the polarizer, LCD cells,etc.

3) Since the front polarizer is easily damaged. Please pay attention not to scratch on its face.
4) If the surface of the LCD cells needs to recleaned, wipe it swiftly with cotton or other soft cloth. If still not completely clear, blow on its and wipe.
5) Water droplets, etc, must be wiped off immediately since they may cause color changes, staining, etc, if remained for a long time.
6) Since LCD is made of glass plates, dropping the unit or banging it against hard objects may cause cracking or fragmentation.
7) CMOS LSIS are equipped in this unit, so care must be taken to avoid the electro static charge, by earthing human body, etc. Take the following measures, to protect the unit from the electric discharge via mounting tabs from the main system the electrified with static electricity.
   (1) Earth the metallic case of the main system (contact of the unit and main system).
   (2) Insulate the unit and main system by attaching insulating washers made of bakelite or nylon,etc.
8) The unit should be driven according to the specified ratings to avoid malfunction of parmanent damage. DC voltage drive leads to rapid deterioration of LC, so ensure that the drive is alternating waveform by continuous application of the signal M. Especially the power ON/OFF sequence shown on next page is strongly recommended to avoid latch-up of drive LSIS and application of DC voltage to LCD panel.
9) Since leakage current, which may be caused by routing of CCFT cables,etc., may affect the brightness of the display, the inverter has to be designed taking the leakage current into consideration. Thorough evaluation of the LCD unit/inverter built into its host equipment shall be conducted, therefore, to ensure the specified brightness.
10) Avoid to expose the unit to the direct sun-light, strong ultraviolet light, etc. for a long time.
11) If stored at temperatures below specified storage temperature, the LC may freeze and be deteriorated. If storage temperature exceed the specified rating. the molecular orientation of the LC may change to that of a liquid, and they may not revert to their original state. As for as possible always store at normal room temperature.
12) Disassembling the LCD unit can cause permanent damege and should be strictly avoided.

13) How to insert interface connector

When the interface connector is inserted, it should be parallel to the connector of LCD module and it should be inserted horizontally.

When the connector is attempted to be fixed to LCD connector, it should be inserted properly in order not to create a gap as shown “A”.

Please insert the connector as both edge is placed to the connect position of LCD connector.

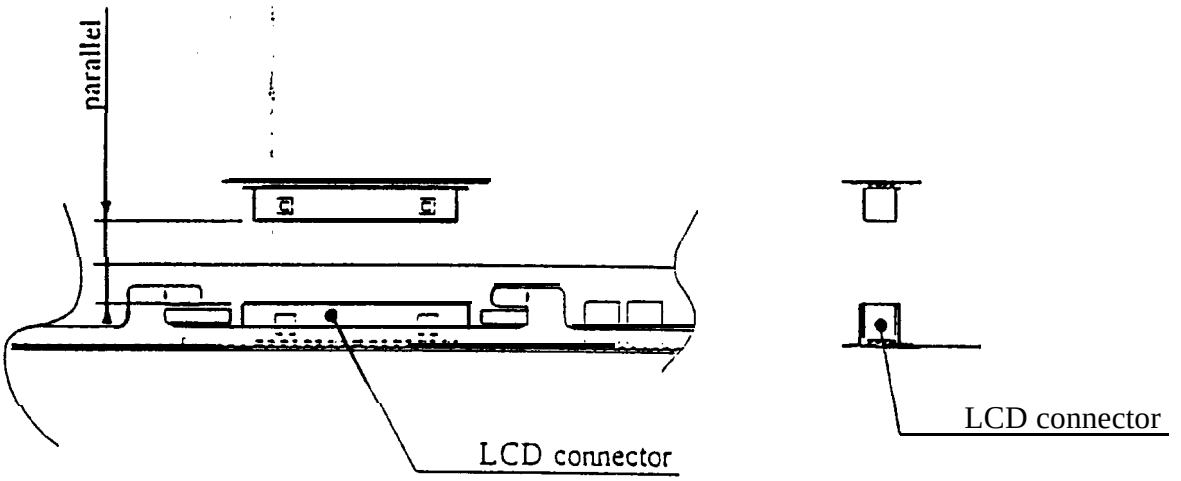

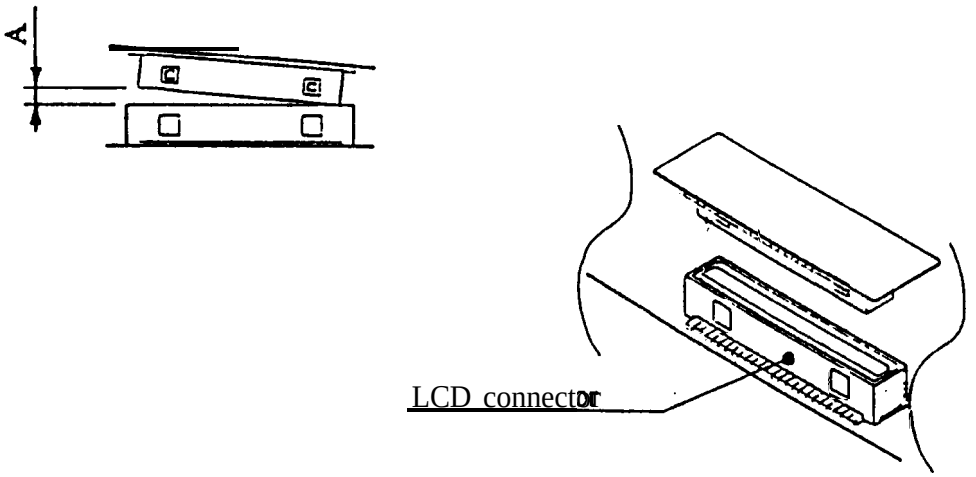

Supplt voltage sequence condition

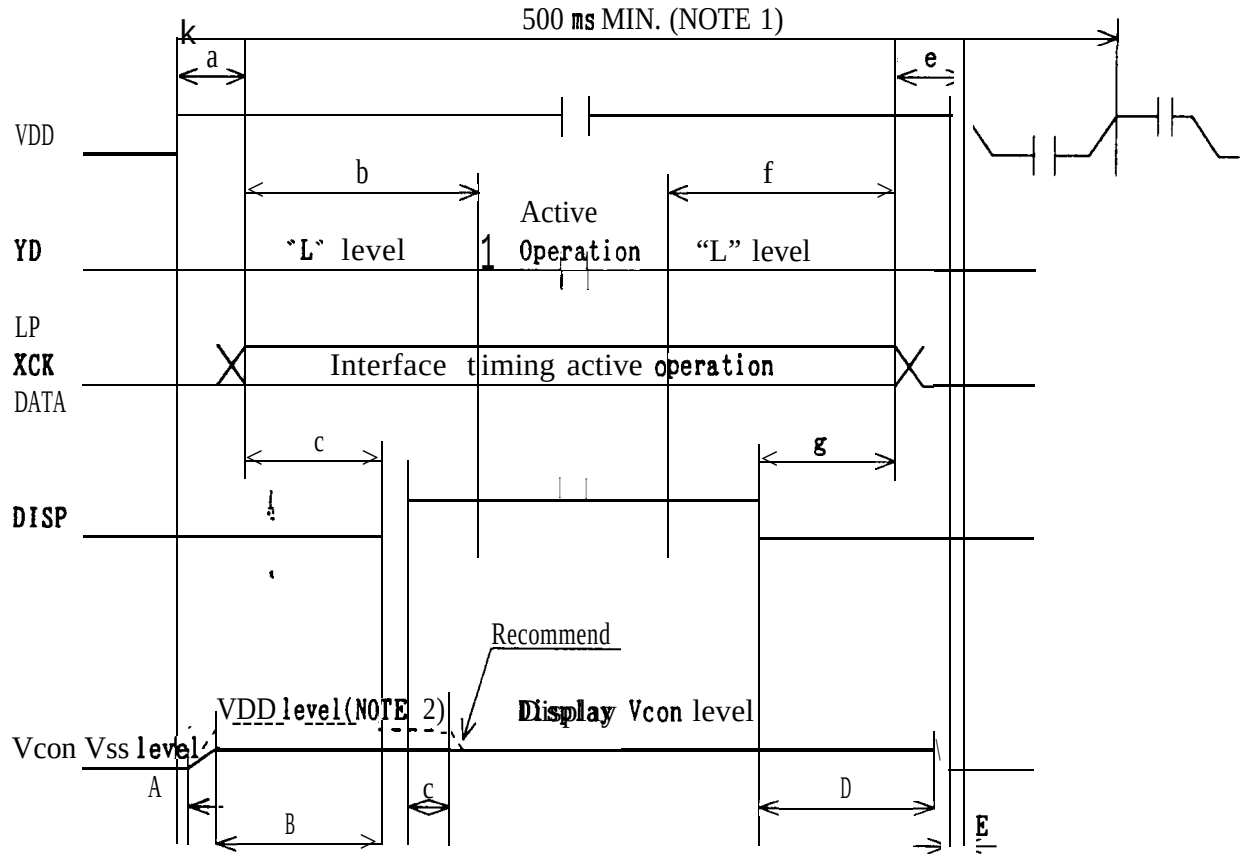

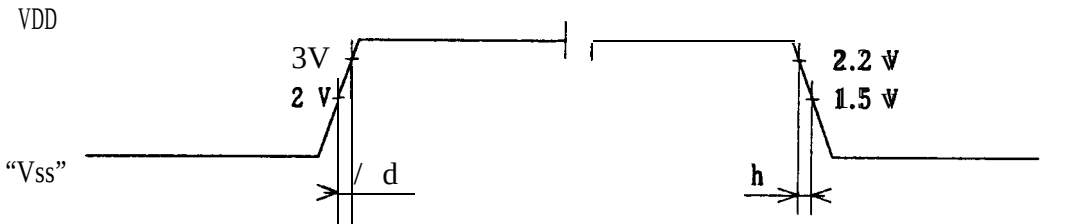

	POWER ON	
SYMBOL	Allowable value	
a	0 ms MIN.	1 s MAX.
b	O ms MIN.	1 s MAX.
c	LPx250 MIN.	1 s MAX.
d	-	25 ms MAX.
A	O ms MIN.	–
B	O ms MIN.	–
c	60 ms MIN. (NOTE 2) Recommend	

POWER OFF		
SYMBOL	Allowable value	
e	O ms MIN.	1 s MAX.
f	Oms MIN.	–
g	Oms MIN.	1 s MAX.
h	1ms MIN.	–
D	O ms MIN.	–
E	Oms MIN.	–

NOTE 1) Power ON/OFF cycle time. All signals and power line shall be in accordance with above sequence in case of power ON/OFF.

NOTE 2) In order to reduce the rush current, It is recommended that "Vcon" to be set to "VDD" level after power on. C(6O ms MIN.) is recommended.

9. Applicable inspection standard

The LCD module shall meet the following inspection standard

:S-U-014

10. This specification describes display quality in case of no gray scale. Since display quality can be affected by gray scale methods, display quality shall be carefully evaluated for the usability of the LCD MODULE in case gray scale is displayed on the LCD MODULE.

WARNING

DON' T USE ANY' MATERIALS WHICH EMIT FOLLOWING GAS FROM EPOXY RESIN (AMINES' HARDENER) AND SILICONE ADHESIVE AGENT (DEALCOHOL OR DEOXYM) TO PREVENT CHANGE POLARIZER COLOR OWING TO GAS.

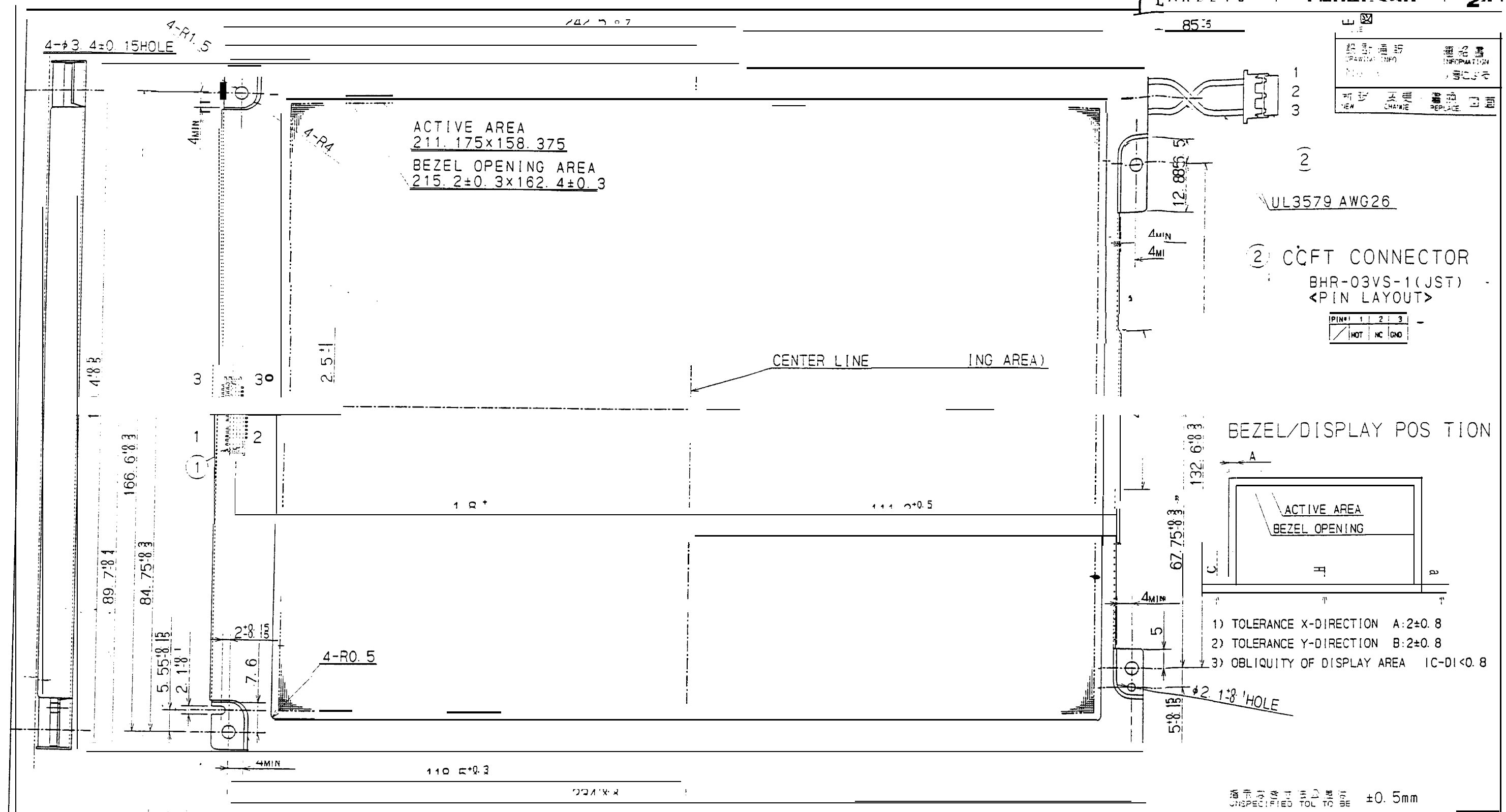

PIN#	1	2	3	4	5	6	7	8	9	10	11	12	13	14	15
	DL4	GND	DL5	YD	DL6	LP	DL7	GND	GND	XCK	DL0	VCON	DL1	VDD	GND
16	17	18	19	20	21	22	23	24	25	26	27	28	29	30	31
VDD	DL2	DISP	DL3	NC	GND	DU3	DU4	DU2	DU5	DU1	GND	DU0	DU6	GND	DU7

年月日	改定記事	設計No.	担当
LM64C350	適用機種 MODEL		
材質 MATERIAL	板厚 THICKNESS	仕上 FINISH	尺度 SCALE
設計 DESIGN	写図 TRACE	検図 CHECK	検図 CHECK	承認 APPROVE
K. ORIUCHI				

SHARP CORPORATION
シャープ株式会社 液晶奈良(事本)
テレビ部門 テレビ一般ジャンル第2技術部

名称 NAME	LCD UNIT OUTL NW DIMENSIONS
記号 SYMBOL	640xR·G·Bx480DOTS 1/240 DUTY
部品コード PARTS CODE	
作成日付 DATE	1995 · 9 · 20 ·
図番 DRAWING No.	

指示なき寸法の差は UNSPECIFIED TOL TO BE	±0.5mm	